Signals and Systems Lecture-11: Fourier Transform (2)

Chadi Abou-Rjeily

Department of Electrical and Computer Engineering
Lebanese American University
chadi.abourjeily@lau.edu.lb

February 23, 2023

Linearity of the Fourier Transform

Linearity:

$$x(t) \leftrightharpoons X(f)$$
$$y(t) \leftrightharpoons Y(f)$$
$$\alpha x(t) + \beta y(t) \leftrightharpoons \alpha X(f) + \beta Y(f)$$

Time Scaling (1)

Time Scaling: The FT of the time-scaled signal $x(at)$ is:

$$x(at) \rightleftharpoons \frac{1}{|a|} X\left(\frac{f}{a}\right)$$

- Note that the above relation implies that:
  - When $|a| > 1$, the signal is compressed in time and stretched in frequency.
  - When $|a| < 1$, the signal is stretched in time and compressed in frequency.
- Proof: Let $z(t) = x(at)$:

$$Z(f) = \mathcal{F}[z(t)] = \int_{-\infty}^{+\infty} z(t) e^{-j2\pi ft} \mathrm{d}t = \int_{-\infty}^{+\infty} x(at) e^{-j2\pi ft} \mathrm{d}t$$

Time Scaling (2)

- Let $\tau = at$, then $\mathrm{d}\tau = a\mathrm{d}t$.
- For $a > 0$:

$$Z(f) = \int_{-\infty}^{+\infty} x(\tau) e^{-j2\pi f \frac{\tau}{a}} \frac{1}{a} \mathrm{d}\tau$$

$$= \frac{1}{a} \int_{-\infty}^{+\infty} x(\tau) e^{-j2\pi \frac{f}{a}\tau} \mathrm{d}\tau = \frac{1}{a} X\left(\frac{f}{a}\right) = \frac{1}{|a|} X\left(\frac{f}{a}\right)$$

- For $a < 0$:

$$Z(f) = \int_{+\infty}^{-\infty} x(\tau) e^{-j2\pi f \frac{\tau}{a}} \frac{1}{a} \mathrm{d}\tau$$

$$= -\frac{1}{a} \int_{-\infty}^{+\infty} x(\tau) e^{-j2\pi \frac{f}{a}\tau} \mathrm{d}\tau = -\frac{1}{a} X\left(\frac{f}{a}\right) = \frac{1}{|a|} X\left(\frac{f}{a}\right)$$

- Therefore, in both cases:

$$Z(f) = \mathcal{F}[x(at)] = \frac{1}{|a|} X\left(\frac{f}{a}\right)$$

Time Scaling (3)

Example:

- We have proven in the lecture 10 that:

$$\mathcal{F}\left[\text{comb}\left(t\right)\right] = \text{comb}\left(f\right)$$

- Scaling the time by T_0 results in:

$$\text{comb}\left(\frac{t}{T_0}\right) \quad \Leftrightarrow \quad T_0\text{comb}\left(T_0 f\right)$$

$$\underbrace{\frac{1}{T_0}\text{comb}\left(\frac{t}{T_0}\right)}_{=\sum_n \delta(t-nT_0)} \quad \Leftrightarrow \quad \underbrace{\text{comb}\left(T_0 f\right)}_{=\frac{1}{T_0}\sum_{n\in\mathbb{Z}} \delta\left(f-\frac{n}{T_0}\right)}$$

  - Note that:

$$\text{comb}\left(T_0 f\right) = \sum_n \delta(T_0 f - n) = \sum_n \delta\left(T_0\left(f - \frac{n}{T_0}\right)\right)$$

$$= \frac{1}{T_0}\sum_n \delta\left(f - \frac{n}{T_0}\right)$$

Frequency Scaling

- Since:

$$x(at) \rightleftharpoons \frac{1}{|a|} X\left(\frac{f}{a}\right)$$

- Replacing a by $\frac{1}{a}$ results in:

$$x\left(\frac{t}{a}\right) \rightleftharpoons |a| X(af)$$

$$\Rightarrow \frac{1}{|a|} x\left(\frac{t}{a}\right) \rightleftharpoons X(af)$$

- In particular, for $a = -1$:

$$x(-t) \rightleftharpoons X(-f)$$

Duality

Duality: If the Fourier Transform (FT) of $x(t)$ is $X(f)$. What is the FT of $X(t)$?

$$x(t) \leftrightharpoons X(f)$$
$$X(t) \leftrightharpoons x(-f)$$

- Applying the time scaling property:

$$X(-t) \leftrightharpoons x(f)$$

- Example: We have already seen that the FT of $\mathrm{rect}(t)$ is equal to $\mathrm{sinc}(f)$:

$$\mathrm{rect}(t) \leftrightharpoons \mathrm{sinc}(f)$$
$$\Rightarrow \quad \mathrm{sinc}(t) \leftrightharpoons \mathrm{rect}(-f) \underbrace{=}_{\text{since rect}(.)\text{ is even}} \mathrm{rect}(f)$$

Transform of a conjugate

Fourier Transform of a Conjugate:

$$x^*(t) \rightleftharpoons X^*(-f)$$

- *Proof:*

$$X(f) = \int_{-\infty}^{+\infty} x(t) e^{-j2\pi ft} \mathrm{d}t$$

Consequently:

$$X^*(f) = \int_{-\infty}^{+\infty} x^*(t) e^{j2\pi ft} \mathrm{d}t$$

$$X^*(-f) = \int_{-\infty}^{+\infty} x^*(t) e^{-j2\pi ft} \mathrm{d}t$$

$$= \mathcal{F}(x^*(t))$$

- The time scaling property implies that:

$$x^*(-t) \rightleftharpoons X^*(f)$$

Fourier Transform of real signals

- For real signals:

$$x(t) = x^*(t)$$
$$X(f) = X^*(-f) \quad \Rightarrow \quad X(-f) = X^*(f)$$

- When $x(t)$ is real and even:

$$x(t) = x(-t)$$
$$X(f) = X(-f) = X^*(f)$$

  - $X(f)$ is real and even.
- When $x(t)$ is real and odd:

$$x(t) = -x(-t)$$
$$X(f) = -X(-f) = -X^*(f)$$

  - $X(f)$ is pure imaginary and odd.

Parseval's Theorem

Parseval's Theorem:

$$\underbrace{\int_{-\infty}^{+\infty} |x(t)|^2 \, \mathrm{d}t}_{\text{total energy in the time domain}} = \underbrace{\int_{-\infty}^{+\infty} |X(f)|^2 \, \mathrm{d}f}_{\text{total energy in the frequency domain}}$$

- Example, evaluate:

$$\int_{-\infty}^{+\infty} \mathrm{sinc}^2(t)\mathrm{d}t$$

  - $x(t) = \mathrm{sinc}(t) \rightleftharpoons X(f) = \mathrm{rect}(f)$, consequently:

$$\int_{-\infty}^{+\infty} \mathrm{sinc}^2(t)\mathrm{d}t = \int_{-\infty}^{+\infty} \mathrm{rect}^2(f)\mathrm{d}f = \int_{-\frac{1}{2}}^{+\frac{1}{2}} \mathrm{d}f = 1$$

Time Shifting (1)

Time shifting:

$$x(t-t_0) \leftrightharpoons X(f)e^{-j2\pi t_0 f}$$

- Let $x'(t) = x(t-t_0)$, then:

$$X'(f) = \int_{-\infty}^{+\infty} x'(t)e^{-j2\pi ft}\mathrm{d}t = \int_{-\infty}^{+\infty} x(t-t_0)e^{-j2\pi ft}\mathrm{d}t$$

Let $t' = t - t_0$, then:

$$\begin{aligned} X'(f) &= \int_{-\infty}^{+\infty} x(t')e^{-j2\pi f(t'+t_0)}\mathrm{d}t' \\ &= \int_{-\infty}^{+\infty} x(t')e^{-j2\pi ft'}e^{-j2\pi ft_0}\mathrm{d}t' \\ &= e^{-j2\pi ft_0}\underbrace{\int_{-\infty}^{+\infty} x(t')e^{-j2\pi ft'}\mathrm{d}t'}_{=X(f)} \end{aligned}$$

Time Shifting (2)

$$|X'(f)| = |X(f)|$$
$$\arg(X'(f)) = \arg(X(f)) - 2\pi t_0 f$$

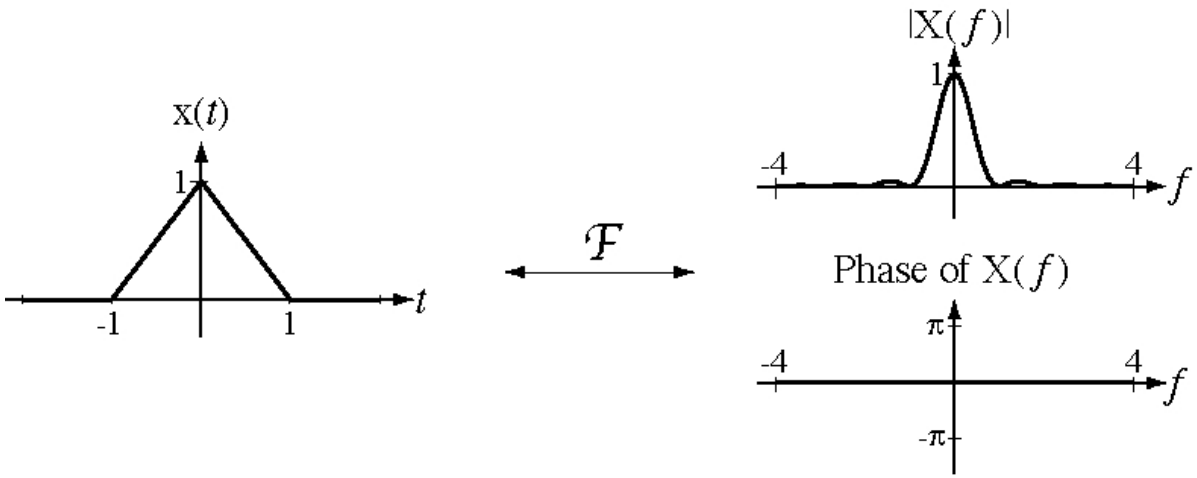

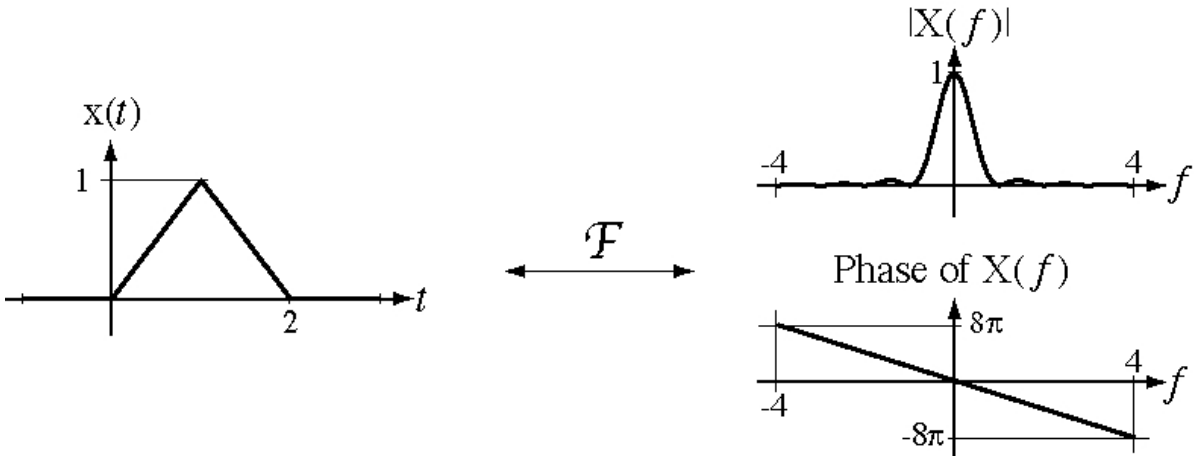

Frequency Shifting (1)

Frequency shifting:

$$x(t)e^{j2\pi f_0 t} \rightleftharpoons X(f - f_0)$$

- Let $X'(f) = X(f - f_0)$. The inverse FT of $X'(f)$ is:

$$x'(t) = \int_{-\infty}^{+\infty} X'(f)e^{j2\pi ft}\mathrm{d}f = \int_{-\infty}^{+\infty} X(f - f_0)e^{j2\pi ft}\mathrm{d}f$$

Let $f' = f - f_0$:

$$\begin{aligned} x'(t) &= \int_{-\infty}^{+\infty} X(f')e^{j2\pi(f'+f_0)t}\mathrm{d}f' \\ &= \int_{-\infty}^{+\infty} X(f')e^{j2\pi f't}e^{j2\pi f_0 t}\mathrm{d}f' \\ &= e^{j2\pi f_0 t}\underbrace{\int_{-\infty}^{+\infty} X(f')e^{j2\pi f't}\mathrm{d}f'}_{=x(t)} \end{aligned}$$

Frequency Shifting (2)

Example: What is the FT of $e^{j2\pi f_0 t}$?

- Let $x(t) = 1$, then $X(f) = \delta(f)$.
- Consequently, $e^{j2\pi f_0 t} = x(t)e^{j2\pi f_0 t}$.
- Applying the frequency shifting property:

$$\mathcal{F}\left[e^{j2\pi f_0 t}\right] = \mathcal{F}\left[x(t)e^{j2\pi f_0 t}\right] = X(f - f_0) = \delta(f - f_0)$$

Modulation

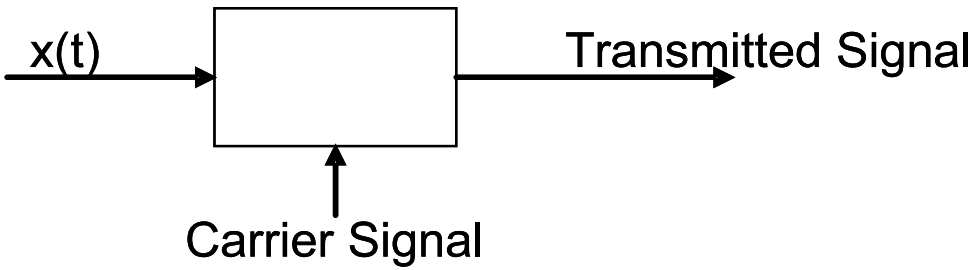

- More efficient to transmit electro-magnetic signals at higher frequencies.
- Multiple signals can be transmitted over the same medium (channel) using different carriers.
- Next we consider the Amplitude Modulation (AM).
  - In this case:

$$c(t) = \cos(2\pi f_c t)$$

where f_c is the carrier frequency.

Amplitude Modulation (1)

- For Amplitude Modulation (AM), the modulated signal is $y(t) = x(t)\cos(2\pi f_c t)$.

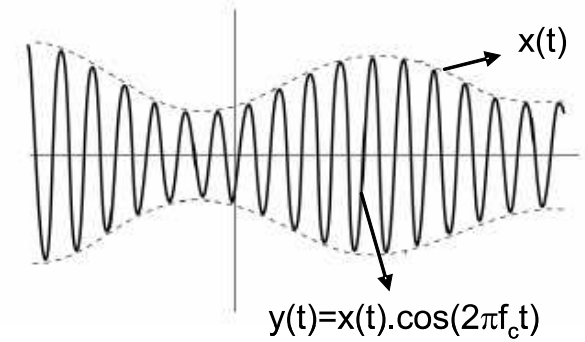

- *Proposition:* The Fourier transform of $y(t)$ is:

$$y(t) \rightleftharpoons \frac{1}{2}X(f - f_c) + \frac{1}{2}X(f + f_c)$$

- *Proof:* Using the frequency shifting property of the FT:

$$y(t) = x(t)\cos(2\pi f_c t) = \frac{1}{2}x(t)e^{j2\pi f_c t} + \frac{1}{2}x(t)e^{-j2\pi f_c t}$$

$$\Updownarrow$$

$$Y(f) = \frac{1}{2}X(f - f_c) + \frac{1}{2}X(f + f_c)$$

Amplitude Modulation (2)

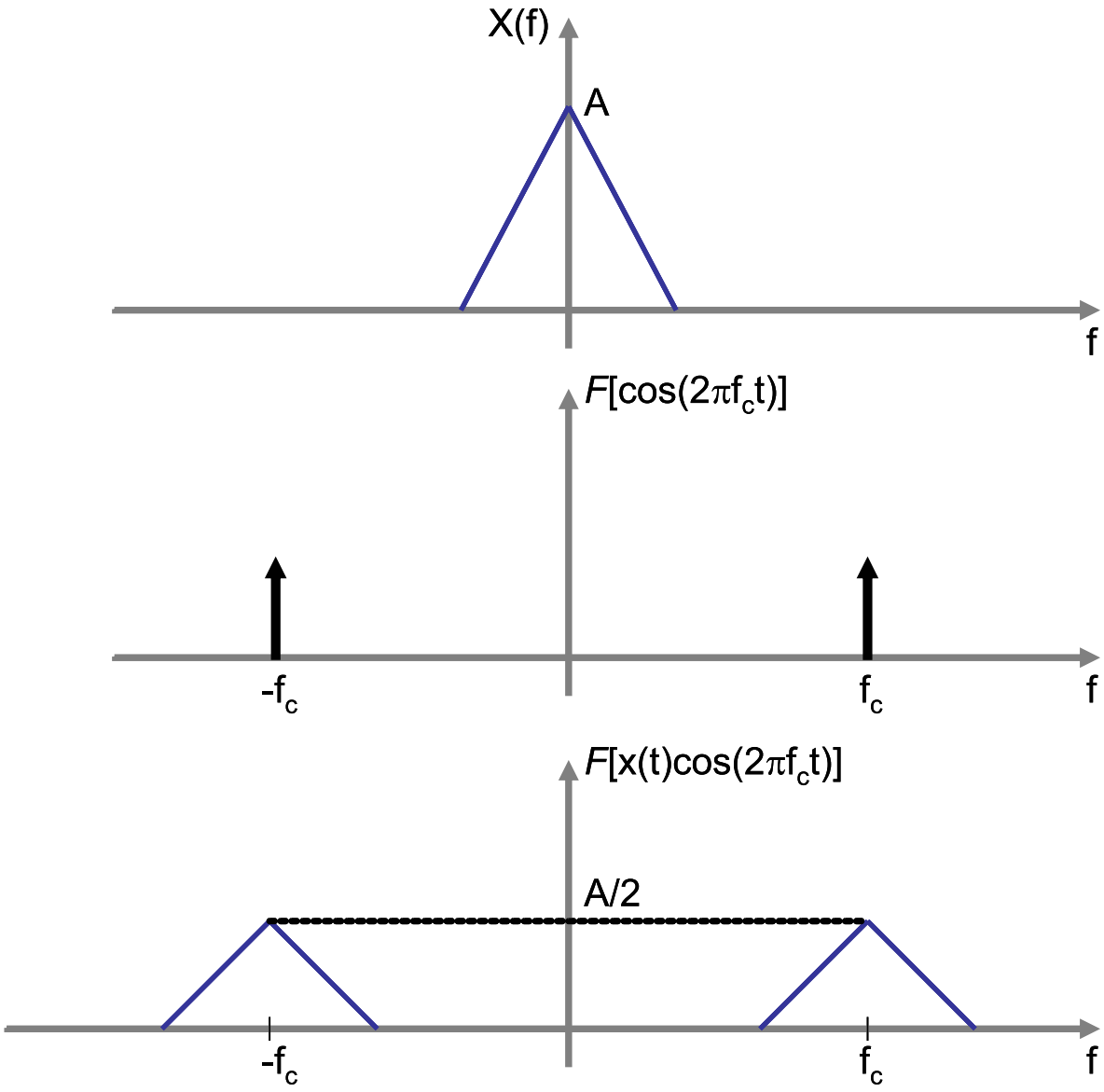

Amplitude Modulation (3)

Demodulation:

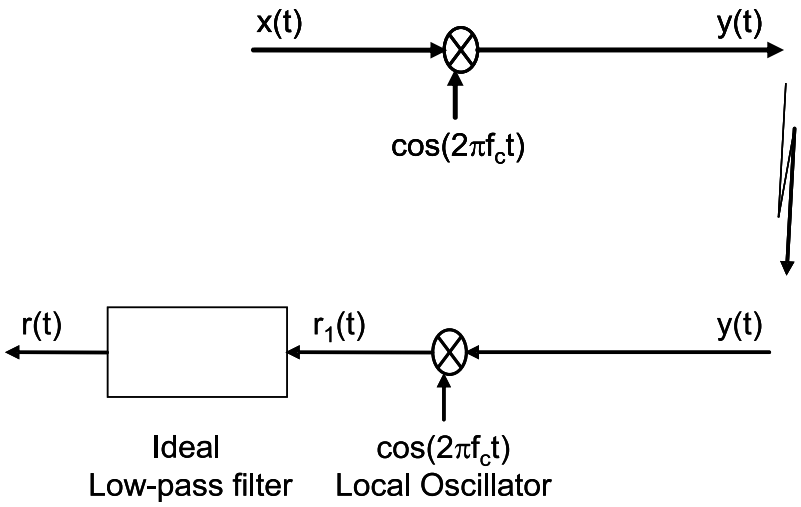

$$r_1(t) = y(t)\cos(2\pi f_c t)$$
$$= x(t)\cos^2(2\pi f_c t) = \frac{1}{2}x(t) + \frac{1}{2}x(t)\cos(4\pi f_c t)$$

- The second term is a high frequency signal that is filtered out by the low-pass filter. Consequently:

$$r(t) = \frac{1}{2}x(t)$$

Amplitude Modulation (4)

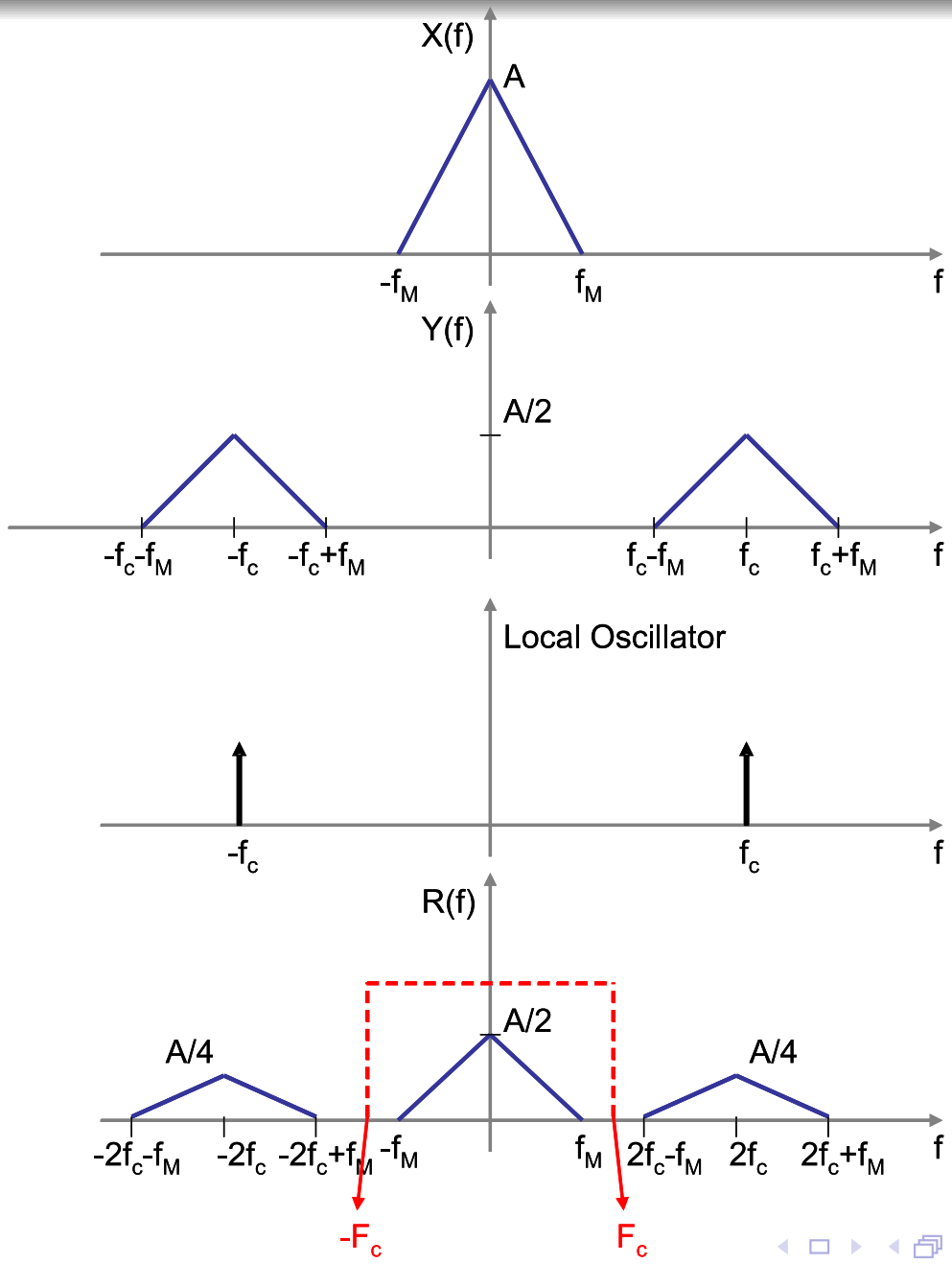

Amplitude Modulation (5)

- The cutoff frequency (F_c) of the ideal low-pass filter must verify:

$$f_M \leq F_c \leq 2f_c - f_M$$

  where f_M is the maximum frequency of $x(t)$.
- In order to eliminate the overlap:

$$2f_c - f_M \geq f_M \quad \Rightarrow \quad f_c \geq f_M$$

  - When $x(t)$ is a voice signal:
    - f_M is equal to several hundreds of Hz.
    - f_c is equal to several MHz (1 MHz = 10^6 Hz).
- The gain of the filter can be multiplied by 2 in order to have $r(t) = x(t)$.

Frequency Division Multiplexing (1)

- Radio-station signals and analog cell phones.

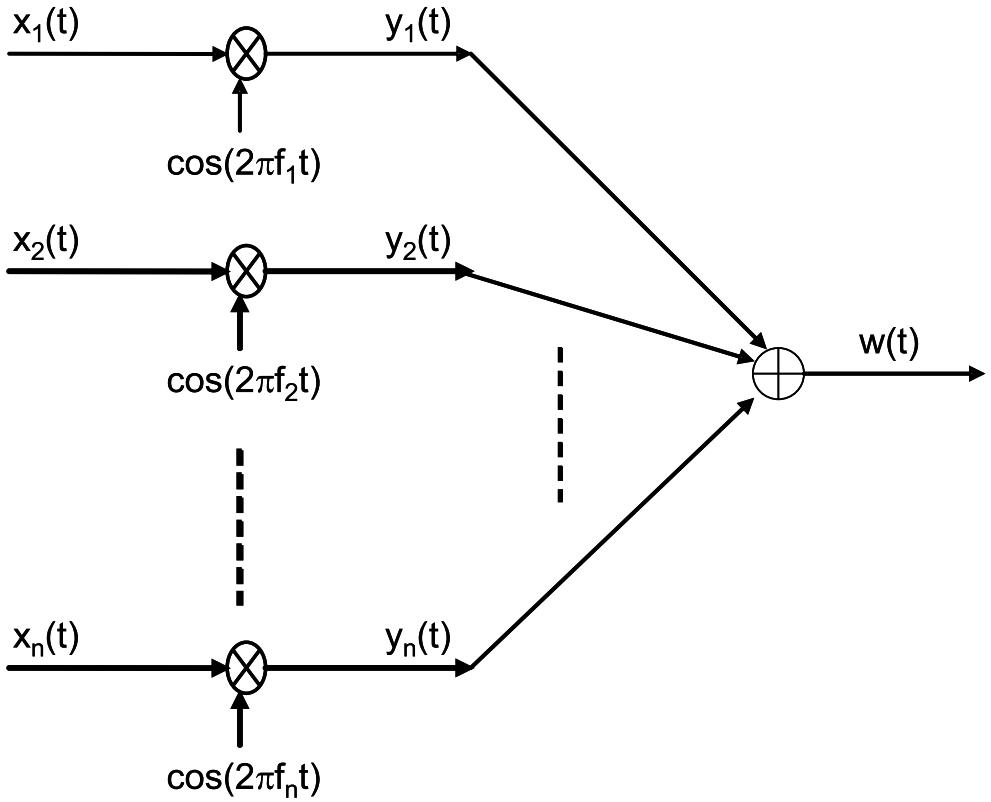

- By an appropriate choice of the carrier frequencies $f_1, \ldots, f_n$, the n users can share the same channel (air, coaxial cable ...).
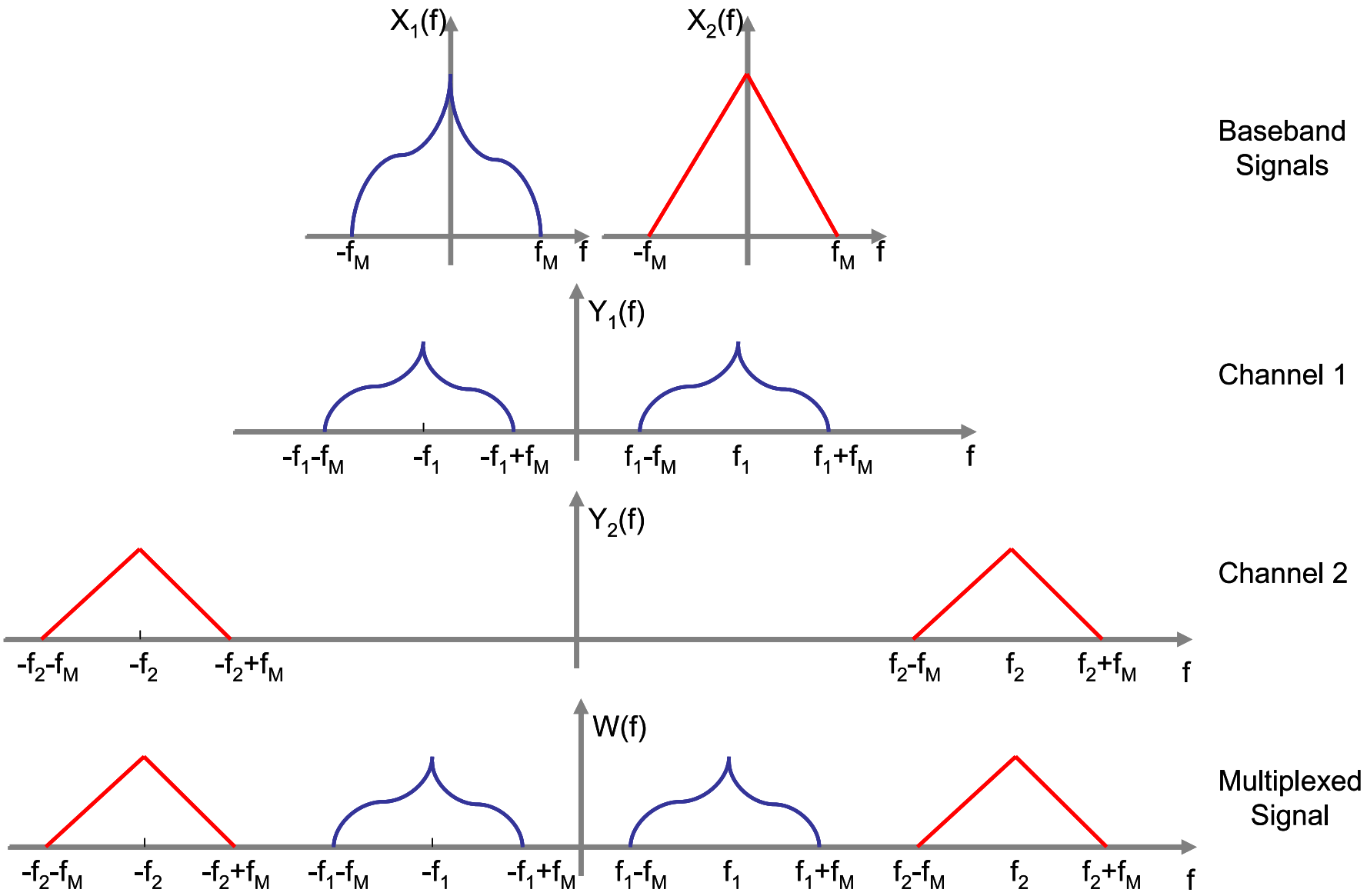
Frequency Division Multiplexing (2)